IR 1500 SC / IR 1510 SC / IR 2000 SC

EN

INSTRUCTIONS
RADIANT HEATER

TROTEC

TRT-BA-IR1500SC-IR1510SC-IR2000SC-TC231116TTRT02-006-EN

Table of contents

Information on the use of these instructions 2

Safety 3

Information about the device 6

Transport and storage 6

Assembly and start-up 7

Operation 9

Errors and faults 10

Maintenance 10

Technical annex 11

Disposal 11

Information on the use of these instructions

Symbols

Warning
This signal word indicates a hazard with an average risk level which, if not avoided, can result in serious injury or death.

Warning
This symbol indicates a fire hazard.

Warning of electrical voltage
This symbol indicates dangers to the life and health of persons due to electrical voltage.

Warning of hot surface
This symbol indicates dangers to the life and health of persons due to hot surface.

Notice
This signal word indicates important information (e.g. material damage), but does not indicate hazards.

Info
Information marked with this symbol helps you to carry out your tasks quickly and safely.

Follow the manual
Information marked with this symbol indicates that the instructions must be observed.

You can download the current version of these instructions via the following link:

IR 1500 SC

https://hub.trotec.com/?id=44541

IR 1510 SC

https://hub.trotec.com/?id=44912

IR 2000 SC

https://hub.trotec.com/?id=44914

Safety

Read this manual carefully before starting or using the device. Always store the manual in the immediate vicinity of the device or its site of use.

Warning

Read all safety warnings and all instructions.
Failure to follow the warnings and instructions may result in electric shock, fire and/or serious injury.
Save all warnings and instructions for future reference.
This appliance can be used by children aged from 8 years and above and persons with reduced physical, sensory or mental capabilities or lack of experience and knowledge if they have been given supervision or instruction concerning use of the appliance in a safe way and understand the hazards involved.
Children shall not play with the appliance. Cleaning and user maintenance shall not be done by children without supervision.

Warning

Children of less than 3 years should be kept away from the device unless continuously supervised.
Children aged from 3 years and less than 8 years shall only switch on/off the appliance provided that it has been placed or installed in its intended normal operating position and they have been given supervision or instruction concerning use of the appliance in a safe way and understand the hazards involved.
Children aged from 3 years and less than 8 years shall not plug in, regulate and clean the appliance or perform user maintenance.

- Do not use the device in potentially explosive rooms or areas and do not install it there.
- Do not use the device in an aggressive atmosphere.
- Parts of the device may become hot and may produce arcs or sparks. Do not use this device in the vicinity of fuel, solvents, varnishes or other easily inflammable and/or explosive vapours or in rooms where these substances are stored. Keep device away from open fire and hot surfaces and do not store or operate it in their vicinity.
- Let the device dry out after a wet clean. Do not operate it when wet.
- Do not use the device with wet or damp hands.
- Do not expose the device to directly squirting water.
- Never insert any objects or limbs into the device.
- Do not insert objects into the ventilation inlets. Failure to comply may result in electric shock, fire or damage to the device if this is not observed.
- Do not use the device as source of ignition.
- Do not cover the device during operation.
- This appliance is not a toy. Keep away from children and animals.
- Check accessories and connection parts for possible damage prior to every use of the device. Do not use any defective devices or device parts.
- Ensure that all electric cables outside of the device are protected from damage (e.g. caused by animals). Never use the device if electric cables or the power connection are damaged!
- The mains connection must correspond to the specifications in the Technical annex.
- Insert the mains plug into a properly fused mains socket.
- If possible, do not use extensions to the power cable as they can overheat and cause a fire. If you need to use an extension to the power cable, make sure its length is at least 1.5 m.
- Observe the device's power input, cable length and intended use when selecting extensions to the power cable. Completely unroll extension cables. Avoid electrical overload.
- Before carrying out maintenance, care or repair work on the device, remove the mains plug from the mains socket. Hold onto the mains plug while doing so.
- Switch the device off and disconnect the power cable from the mains socket when the device is not in use.
- Do not under any circumstances use the device if you detect damages on the mains plug or power cable.
  If the supply cord is damaged, it must be replaced by a special cord or assembly available from the manufacturer or its service agent.
  Defective power cables pose a serious health risk!
- When installing the device, observe the minimum distances from walls and other objects as well as the storage and operating conditions according to the technical data (chapter Technical annex).
- Keep a safety distance of at least 1 m between the device's radiator side and all combustible materials such as textiles, curtains and sofas.
- Allow the device to cool down before transport and/or maintenance work.
- The device must not be installed directly beneath a socket.
- The device must not be used with a programming switch, timer, separate remote control system or similar equipment that switches the device on automatically, as this could cause a fire hazard if the heater is covered or positioned incorrectly.
- Make sure that the air inlet is not obstructed. Risk of fire! Do not use the device on soft surfaces (e.g. on a bed) as this may block the air inlet.

- Make sure that no inflammable material such as curtains, roller shutters, flags, plastic sheeting etc. covers the device due to wind or other weather conditions.
- Do not use the device if it has been dropped or if it shows visible signs of damage.
- Never use the device after it has been dropped.
  If the device has been dropped, it must be inspected and, if necessary, repaired by the manufacturer, its customer service or a similarly qualified person in order to avoid hazards.
- Use the CR 2025 button battery type.
- Do not insert a rechargeable battery into the remote control.
- Never charge a battery that cannot be recharged.
- Remove the discharged battery. Batteries contain materials hazardous to the environment. Dispose of the battery according to the national regulations.
- Remove the battery from the remote control if you will not be using the device for a longer period of time.
- Never short-circuit the terminal of the battery!
- Do not swallow batteries! If a battery is swallowed, it can cause severe internal burns within 2 hours! These burns can lead to death!
- If you think batteries might have been swallowed or otherwise entered the body, seek medical attention immediately!
- Keep new and used batteries and an open battery compartment away from children.
- If the battery compartment does not close securely, stop using the product via the remote control.

Intended use

Use the device for heating surfaces in roofed outdoor areas and protected from weather exposure.

The device is only intended for ceiling installation.

Intended use comprises:

- heating surfaces
  - in storage facilities,
  - in construction areas,
  - in containers,
  - in the catering trade,
  - at trade fairs and events,
  - in roofed outdoor areas (e.g. covered terraces).

Any use other than the intended use is regarded as misuse.

Reasonably foreseeable misuse

- The device is not intended for industrial use.
- Do not place any objects, e.g. clothing, on the device.
- Do not use the device for heating in vehicles.
- Do not use this device in the vicinity of fuel, solvents, varnishes or other easily inflammable vapours or in rooms where these substances are stored.
- The device may not be used as a heating device for babies / children or animals.
- Never immerse the device in water.
- The device may not be exposed to moisture or weather effects (rain, sunlight).
- This radiator must be set up in a way that the switches and controllers cannot be touched by a person in a bathtub, pool or shower.
- Do not make any unauthorised modifications, alterations or structural changes to the device.

Personnel qualification

People who use this device must:

- have basic knowledge of how to safely handle electrical equipment.
- have read and understood the instructions, especially the Safety chapter.

Maintenance tasks which require the housing to be opened must only be carried out by specialist electrical companies or by the manufacturer.

Symbols on the device

Symbols	Meaning
	This symbol located on the device indicates that it is prohibited to place objects (e.g. towels, clothes, etc.) above or directly in front of the device. In order to avoid overheating and fire hazards, the appliance must not be covered!

Residual risks

Warning of electrical voltage
Work on the electrical components must only be carried out by an authorised specialist company!

Warning of electrical voltage
Before any work on the device, remove the mains plug from the mains socket!
Do not touch the mains plug with wet or damp hands.
Hold onto the mains plug while pulling the power cable out of the mains socket.

Warning of hot surface
Parts of this appliance can become very hot and cause burns. Particular attention is to be paid when there are children or vulnerable persons present!

Warning
There is a risk of fire by covering the device. Ensure that the device is standing freely at all times and that it is not covered.

Warning
Improper installation or mounting entails a risk of fire.

Warning
Dangers can occur at the device when it is used by untrained people in an unprofessional or improper way! Observe the personnel qualifications!

Warning
The device is not a toy and does not belong in the hands of children.

Warning
There is a danger of suffocation for children due to packaging material! Keep packaging films and parts away from children. There is a risk of death due to suffocation.

Warning
Risk of injury due to infrared radiation!
Do not stay in the device's immediate vicinity for too long. Do not look directly into the device for too long. Observe the minimum distances.

Warning
Coarse dirt particles on the heating rods can cause the device to overheat. Fire hazard!
Remove coarse dirt particles from the heating rods according to the Maintenance chapter before switching on the device.

Behaviour in the event of an emergency

1. Switch the device off.
2. Disconnect the device from the mains by removing the mains plug from the socket. When doing so, be sure to hold the plug, not the cable.
3. Do not reconnect a defective device to the mains.

Information about the device

Device description

The device is used to quickly generate instant heat.

The device is based on the functional principle of heat generation by infrared radiation, which is generated by a carbon heating element in the IR 1500 SC and by a halogen tube in the IR 1510 SC and IR 2000 SC. The infrared radiation is passed on to the surrounding surfaces as heat radiation. Persons or objects are heated directly.

The 3 heating levels can be selected using the remote control.

- suitable for the application in roofed outdoor areas
- for ceiling installation
- silent operation
- no dust circulation (suitable for allergy sufferers)
- splash-proof (IP34)

The three devices differ in terms of their technical data and design. Later in the operating manual, the device IR 1500 SC is depicted as an example.

Device depiction

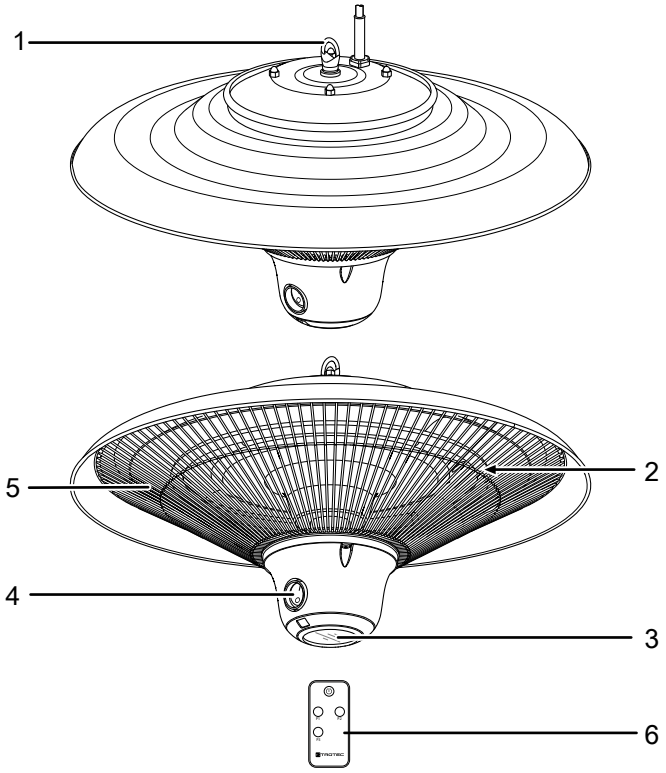

No.	Designation
1	Bracket for ceiling mounting
2	Heating coil
3	Operating light
4	On/off switch
5	Grille
6	Remote control

Transport and storage

Notice

If you store or transport the device improperly, the device may be damaged.
Note the information regarding transport and storage of the device.

Transport

Before transporting the device, observe the following:

- Switch off the device by pressing the on/off button (7) on the remote control at first. Then set the on/off switch (4) on the device to "**0**".
- Disconnect the device from the mains by removing the mains plug from the socket. When doing so, be sure to hold the plug, not the cable.
- Do not use the power cable to drag the device.
- Allow the device to cool down sufficiently.

Storage

Before storing the device, observe the following:

- Disconnect the device from the mains by removing the mains plug from the socket. When doing so, be sure to hold the plug, not the cable.
- Allow the device to cool down sufficiently.

When the device is not being used, observe the following storage conditions:

- Store the device in a dry location and protected from frost and heat.
- Store the device in an upright position where it is protected from dust and direct sunlight.
- If required, use a cover to protect the device from invasive dust.
- Place no further devices or objects on top of the device to prevent it from being damaged.
- Remove the battery from the remote control.

Assembly and start-up

Scope of delivery

- 1 x Device
- 2 x Carabiner hooks
- 1 x 50 cm fastening chain
- 3 x Cable tie
- 1 x Remote control (without batteries)
- 1 x Manual

Unpacking the device

Warning
There is a danger of suffocation for children due to packaging material! Keep packaging films and parts away from children. There is a risk of death due to suffocation.

1. Open the cardboard box and take the device out.
2. Completely remove the packaging.
3. Remove the transport protection from the grille of the radiant heater.
4. Fully unwind the power cable. Make sure that the power cable is not damaged and that you do not damage it during unwinding.

Assembly

The device is intended for ceiling installation. Observe the following requirements for the installation:

Warning
Risk of fire due to improper installation!
There is a risk of fire if the required minimum distances are not observed.
Observe the “Installation” section in the “Assembly and start-up” chapter and the technical data in the “Technical annex” chapter.

Warning
There is a risk of the device falling down if the required minimum carrying capacity for the ceiling has not been observed.
Select or mount a ceiling holder suitable for the weight of the device (see technical data) and the structure of the ceiling. The ceiling and the holder must be able to hold a weight 3 to 4 times heavier than the device. The device must only be mounted to a solid ceiling surface.

1. Hook one carabiner to one end of the fastening chain and to the bracket for ceiling mounting (1).
2. Connect the other carabiner hook with the mounting on the ceiling.
3. Fasten the device on the ceiling by hooking one chain link into the carabiner on the mounting on the ceiling. In doing so, observe the minimum distances from the ceiling and to the ground.
4. Check the clips of the carabiner hooks for closure.

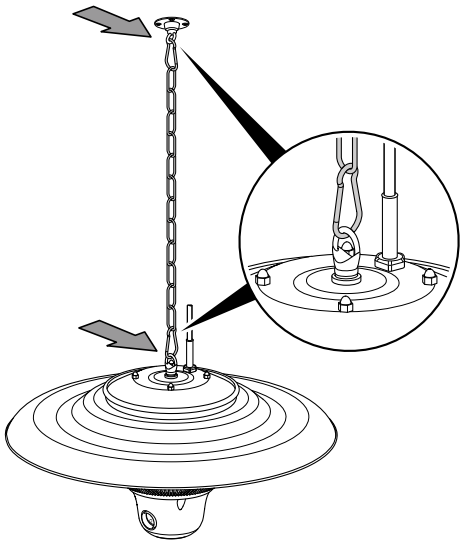

5. Make sure that the on/off switch (4) is in position "**0**".
6. Guide the mains cable along the chain link and fasten the mains cable with cable tie. Note that the mains cable must not make contact with the device.

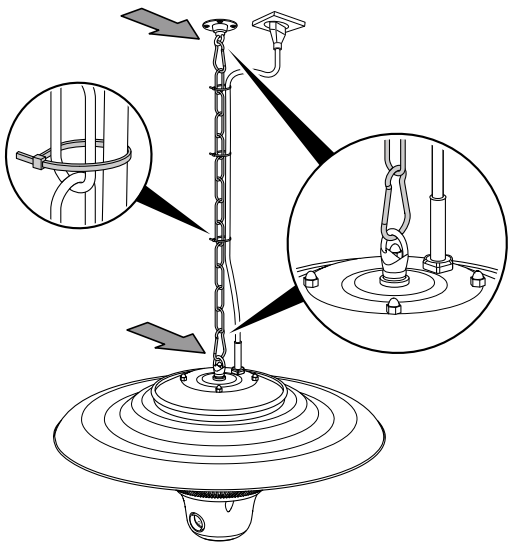

Installation

When installing the device, observe the minimum distances from walls and other objects as described in the Technical data chapter.

- Never install the device in a way that it radiates directly onto walls or other objects. Observe the minimum distances from walls or other objects according to the Technical data chapter.

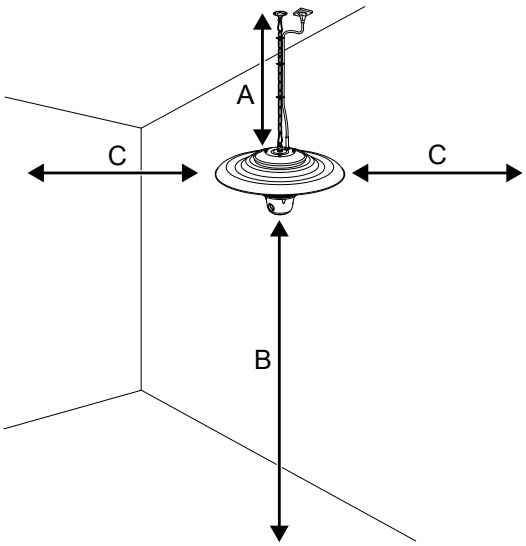

Start-up

Info
Odours may occur upon initial start-up or after a longer period of non-use.

- Before starting the device, check the condition of the power cable. If there are doubts as to their sound condition, contact the customer service.
- Do not create tripping hazards when laying the power cable or other electric cables, especially when positioning the device in the middle of the room. Use cable bridges.
- Make sure that extension cables are completely unrolled.
- Make sure that there are no curtains or similar objects in the immediate vicinity.

Inserting a battery into the remote control

Warning of electrical voltage
Do not touch the battery compartment with wet or damp hands.

Notice
Do not use rechargeable batteries!

1. Press the upper part on the back of the remote control and pull the battery cover off the remote control.
2. Insert a type CR 2025 battery into the battery compartment and slide the battery compartment back into the remote control.
3. Slide the battery cover back onto the remote control.

Connecting the power cable

- Connect the mains plug to a properly secured socket.
- Route the power cable behind the device. Make sure that the power cable is never routed in front of the device!

Operation

Operating elements

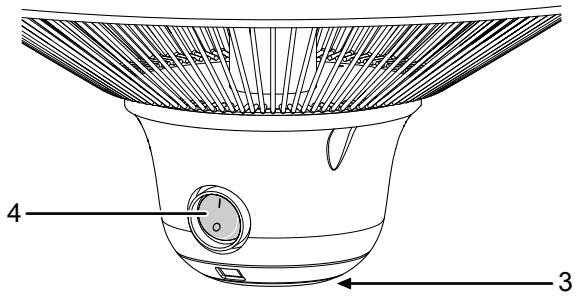

Remote control

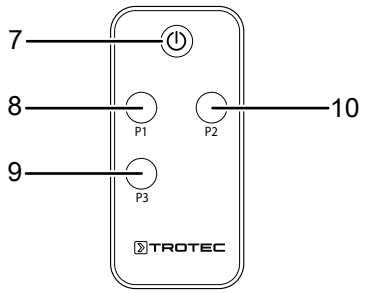

No.	Designation	Meaning
3	Operating light	Illuminated in red in standby mode Illuminated in green during operation
4	On/off switch	For switching the device on or off
7	On/off button	Switching the heating capacity on or off
8	*P1* button	Selecting the low heating capacity IR 1500 SC/IR 1510 SC: 500 W IR 2000 SC: 650 W
9	*P2* button	Selecting medium heating capacity IR 1500 SC/IR 1510 SC: 1000 W IR 2000 SC: 1350 W
10	*P3* button	Selecting a high heating capacity IR 1500 SC/IR 1510 SC: 1500 W IR 2000 SC: 2000 W

Switching the device on

Once you have completely installed the device as described in the chapter Assembly and start-up, you can switch it on.

1. Set the on/off switch (4) to "**I**".
   ⇨ The operating light (3) is illuminated in red.
   ⇨ The device is now in standby mode.
2. Press the on/off switch (7).
3. Press the corresponding button (8, 9, 10) to set the desired heating level.
   ⇨ During operation the operating light (3) is permanently illuminated in green.
   ⇨ The device now starts heating at the selected heating level.

Shutdown

Warning of electrical voltage
Do not touch the mains plug with wet or damp hands.

Info
If you switch off the device via the remote control, the device will be set to standby mode. If standby operation is not required, you can switch the device off using the mains switch.

- Switch off the device by pressing the on/off button (7) on the remote control at first. Then set the on/off switch (4) on the device to "**0**".
- Allow the device to cool down completely.
- Disconnect the device from the mains by removing the mains plug from the socket. When doing so, be sure to hold the plug, not the cable.
- If required, clean the device according to the "Maintenance" chapter.
- Store the device according to the Transport and storage chapter.

Errors and faults

Warning of electrical voltage
Tasks which require the device to be opened must only be carried out by authorised specialist companies or by the manufacturer.

The device has been checked for proper functioning several times during production. If malfunctions occur nonetheless, check the device according to the following list.

The device does not start:

- Check the power connection.
- Check the power cable and mains plug for damage. If you notice damages, do not try to take the device back into operation.
  If the supply cord is damaged, it must be replaced by the manufacturer, its service agent or similarly qualified persons in order to avoid a hazard.
- Check the on-site fusing.
- If the device is not starting, have the electrics checked by a specialist company or by the manufacturer.

The device does not emit heat:

- The heating element may be defective. If the heating element is defective, have it replaced by a specialist electrical company.
- Check the on/off switch (4). If the switch is set to the "**0**" position, the device is switched off. Switch the device on.

RCD or another fuse trips:

- Check the fuse. Switch off any other devices to reduce the load on the line.
- Contact a specialist electrical company.

The device slightly vibrates during switch-on and then stops vibrating:

- Slight vibrations during switch-on are a normal process. No measures are required.

The device does not respond to the infrared remote control:

- Check whether the distance between remote control and device is too large and reduce it if necessary.
- Make sure there are no obstacles, such as furniture or walls, between the device and the remote control. Ensure visual contact between device and remote control.
- If the batteries have just been changed, check them for correct polarity.
- Check the charging status of the battery and replace the battery, if necessary.

The device still does not operate correctly after these checks:

Contact the manufacturer's customer service. If necessary, take the device to an authorised specialist electrical company or to the manufacturer for repair.

Maintenance

Activities required before starting maintenance

Warning of electrical voltage
Do not touch the mains plug with wet or damp hands.

- Switch off the device by pressing the on/off button (7) on the remote control at first. Then set the on/off switch (4) on the device to "**0**".
- Disconnect the device from the mains by removing the mains plug from the socket. When doing so, be sure to hold the plug, not the cable.
- Allow the device to cool down completely.

Warning of electrical voltage
Tasks which require the device to be opened must only be carried out by authorised specialist companies or by the manufacturer.

Cleaning the device

Warning of electrical voltage
Never immerse the device in water!

Warning of hot surface
Do not touch the reflector or the heating rods with bare hands.

Clean the device with a soft, damp and lint-free cloth. Ensure that no moisture enters the housing. Protect electrical components from moisture. Do not use any aggressive cleaning agents such as cleaning sprays, solvents, alcohol-based or abrasive cleaners to dampen the cloth.

Wipe the housing dry after cleaning.

Dirt on the heating rods should be removed with a long brush with soft bristles.

Technical annex

Technical data

Parameter	Value		
Model	IR 1500 SC	IR 1510 SC	IR 2000 SC
Heating capacity	500 / 1000 / 1500 W	500 / 1000 / 1500 W	650 / 1350 / 2000 W
Mains connection	220–240 V / 50–60 Hz	220–240 V / 50–60 Hz	220–240 V / 50–60 Hz
Plug type	CEE 7/7	CEE 7/7	CEE 7/7
Type of protection	IP34	IP34	IP34
Dimensions (length x width x height)	420 x 420 x 240 mm	425 x 425 x 300 mm	605 x 605 x 300 mm
Minimum distance to walls and other objects:			
top (A):	50 cm	50 cm	50 cm
bottom (B):	180 cm	180 cm	180 cm
sides (C):	100 cm	100 cm	100 cm
front:	100 cm	100 cm	100 cm
Weight	1.5 kg	2.5 kg	3 kg
Remote control battery	type CR 2025 / 3 V	type CR 2025 / 3 V	type CR 2025 / 3 V

Disposal

Always dispose of packing materials in an environmentally friendly manner and in accordance with the applicable local disposal regulations.

The icon with the crossed-out wheeled bin indicates that this device and any associated components (e.g. remote controls) must not be disposed of with household waste at the end of their life, in accordance with the Waste Electrical and Electronic Equipment Directive (2012/19/EU) and national laws.

You will find collection points for free return of waste electrical and electronic equipment in your vicinity. The addresses can be obtained from your municipality or local administration. You can also find out about other return options that apply for many EU countries on the website https://hub.trotec.com/?id=45090. Otherwise, please contact an official recycling centre for electronic and electrical equipment authorised for your country.

The separate collection of waste electrical and electronic equipment aims to enable the re-use, recycling and other forms of recovery of waste equipment as well as to prevent negative effects for the environment and human health caused by the disposal of hazardous substances potentially contained in the equipment.

This icon with the crossed-out wheeled bin indicates that batteries or accumulators must not be disposed of with household waste at the end of their life. If the device contains batteries or accumulators that contain mercury, cadmium or lead, the respective chemical symbol (Hg, Cd or Pb) is shown below the icon of the crossed-out wheeled bin. To prevent environmental pollution, do not carelessly leave batteries or electrical and electronic equipment containing batteries in public areas. In the European Union, batteries and accumulators must be returned to a designated collection point in accordance with REGULATION (EU) 2023/1542 OF THE EUROPEAN PARLIAMENT AND OF THE COUNCIL of 12 July 2023 concerning batteries and waste batteries. Remove batteries/accumulators and dispose of them separately according to the relevant legal requirements.

Only for United Kingdom

According to Waste Electrical and Electronic Equipment Regulations 2013 (SI 2013/3113) (as amended) and the Waste Batteries and Accumulators Regulations 2009 (SI 2009/890) (as amended), devices that are no longer usable must be collected separately and disposed of in an environmentally friendly manner.

Trotec GmbH

Grebbener Str. 7
52525 Heinsberg
Germany
+49 2452 962-0
+49 2452 962-200

online@trotec.com
www.trotec.com