BY10



EN

INSTRUCTIONS
TYRE PRESSURE GAUGE

TRT-BA-BY10-TC230711TTRT04-005-EN

TROTEC

Table of contents

Information on the use of these instructions **2**

Safety **2**

Information about the device **4**

Transport and storage **4**

Operation **5**

Maintenance and repair **6**

Disposal **6**

Information on the use of these instructions

Symbols

Warning
This signal word indicates a hazard with an average risk level which, if not avoided, can result in serious injury or death.

Warning of electrical voltage
This symbol indicates dangers to the life and health of persons due to electrical voltage.

Caution
This signal word indicates a hazard with a low risk level which, if not avoided, can result in minor or moderate injury.

Notice
This signal word indicates important information (e.g. material damage), but does not indicate hazards.

Info
Information marked with this symbol helps you to carry out your tasks quickly and safely.

Follow the manual
Information marked with this symbol indicates that the instructions must be observed.

You can download the current version of these instructions via the following link:



BY10

https://hub.trotec.com/?id=41249

Safety

Read this manual carefully before starting or using the device. Always store the manual in the immediate vicinity of the device or its site of use.

Warning
Read all safety warnings and all instructions. Failure to follow the warnings and instructions may result in electric shock, fire and/or serious injury. **Save all warnings and instructions for future reference.**

- Do not use the device in potentially explosive rooms or areas and do not install it there.
- Do not use the device in an aggressive atmosphere.
- Do not immerse the device in water. Do not allow liquids to penetrate into the device.
- The device may only be used in dry surroundings and must not be used in the rain or at a relative humidity exceeding the operating conditions.
- Protect the device from permanent direct sunlight.
- Do not open the device.
- Do not remove any safety signs, stickers or labels from the device. Keep all safety signs, stickers and labels in legible condition.
- Use batteries of type AAA.
- Never charge batteries that cannot be recharged.
- Different types of batteries and new and used batteries must not be used together.
- Insert the batteries into the battery compartment according to the correct polarity.
- Remove discharged batteries. Batteries contain materials hazardous to the environment. Dispose of the batteries according to the national regulations.
- Remove the batteries from the device if you will not be using the device for a longer period of time.
- Never short-circuit the terminals of batteries!

- Do not swallow batteries! If a battery is swallowed, it can cause severe internal burns within 2 hours! These burns can lead to death!
- If you think batteries might have been swallowed or otherwise entered the body, seek medical attention immediately!
- Keep new and used batteries and an open battery compartment away from children.
- Observe the storage and operating conditions (see Technical data).

Intended use

Only use the device to measure the tyre pressure on Schrader valves, as they are used on car and motorbike tyres and sometimes on bicycle tyres. Make sure to adhere to the measuring range specified in the technical data.

Any use other than the intended use is regarded as misuse.

Reasonably foreseeable misuse

Do not use the device in potentially explosive atmospheres, for measurements in liquids or at live parts.
Any unauthorised modifications, alterations or structural changes to the device are forbidden.

Personnel qualification

People who use this device must:

- have read and understood the instructions, especially the Safety chapter.

Residual risks

Warning
There is a danger of suffocation for children due to packaging material! Keep packaging films and parts away from children. There is a risk of death due to suffocation.

Warning of electrical voltage
There is a risk of a short-circuit due to liquids penetrating the housing!
Do not immerse the device and the accessories in water. Make sure that no water or other liquids can enter the housing.

Warning of electrical voltage
Work on the electrical components must only be carried out by an authorised specialist company!

Warning
The device is not a toy and does not belong in the hands of children.

Warning
Dangers can occur at the device when it is used by untrained people in an unprofessional or improper way! Observe the personnel qualifications!

Caution
Keep a sufficient distance from heat sources.

Notice
To prevent damages to the device, do not expose it to extreme temperatures, extreme humidity or moisture.

Notice
Do not use abrasive cleaners or solvents to clean the device.

Information about the device

Device description

With this device you can determine the tyre pressure with digital precision and read it on the LC display.

The device is equipped with an integrated LED torch allowing you to determine the pressure or condition of the tyre in the dark.

Device depiction

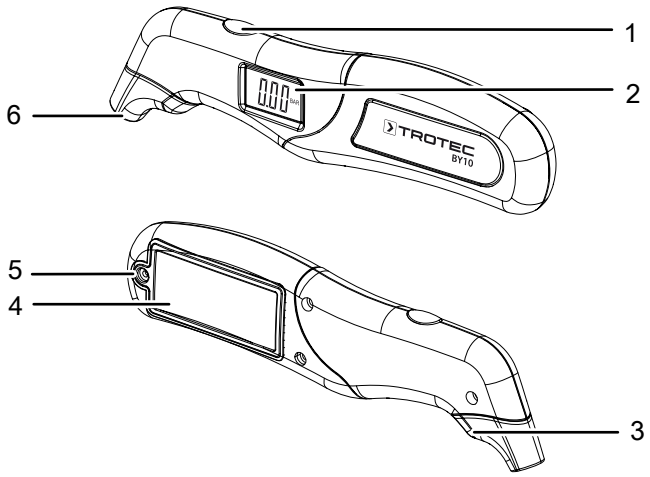

No.	Designation
1	Function button
2	LCD display
3	LED torch
4	Cover of the battery compartment
5	Screw, battery compartment cover
6	Measuring tip

Display

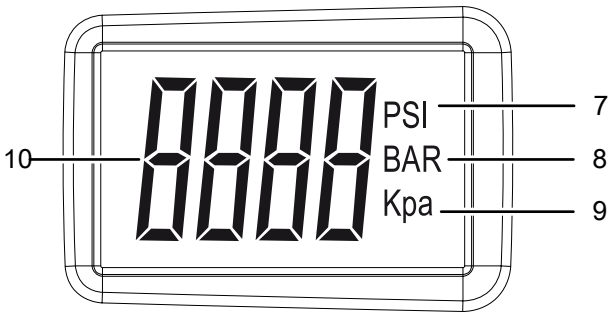

No.	Designation
7	Indication of the unit: *psi*
8	Indication of the unit: *bar*
9	Indication of the unit: *kPa*
10	Measurement value display

Technical data

Parameter	Value
Model	BY10
Measuring range	5 to 100 psi 0.35 to 6.9 bar 35 to 690 kPa
Accuracy	±1 % / 0.5 psi ±1 % / 0.05 bar ±1 % / 3.5 kPa
Ambient conditions	0 °C to 50 °C (35 °F to 122 °F) with < 80 % RH
Power supply	2 x 1.5 V AAA batteries
Automatic switch-off	after approx. 45 seconds
Dimensions (length x width x height)	156 x 20 x 42 mm
Weight	82 g

Scope of delivery

- 1 x Tyre pressure gauge (without batteries)
- 1 x Quick guide

Transport and storage

Notice

If you store or transport the device improperly, the device may be damaged.
Note the information regarding transport and storage of the device.

Transport

When transporting the device, ensure dry conditions and and protect the device from external influences e.g. by using a suitable bag.

Storage

When the device is not being used, observe the following storage conditions:

- dry and protected from frost and heat
- protected from dust and direct sunlight
- at the temperature specified in the technical data
- Batteries are removed from the device

Operation

Inserting the batteries

Notice

Make sure that the surface of the device is dry and the device is switched off.

The battery must be changed if the indication on the LC display is only faintly visible during start-up.

1. Use a screwdriver and carefully remove the screw (5) at the rear of the device.
2. Remove the battery compartment cover (4).

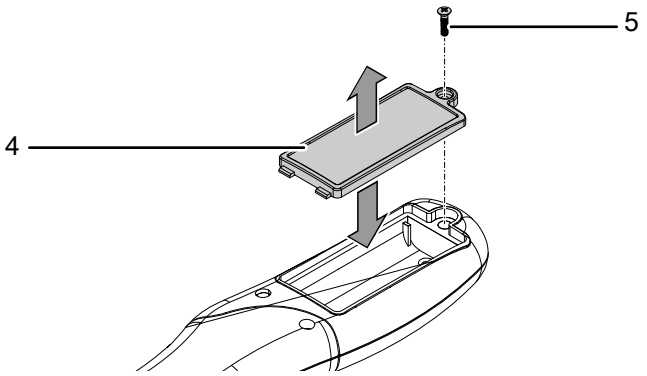

3. Insert the batteries (2 x 1.5 V batteries AAA) (11) into the battery compartment with correct polarity.

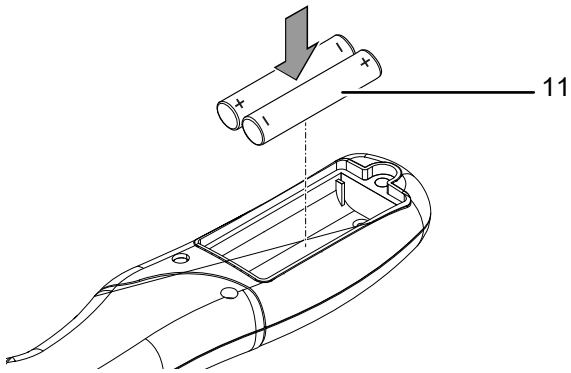

4. Put the cover back onto the battery compartment (5).
5. Use a screwdriver to carefully tighten the screw (5).

Switch-on and air pressure measurements

Info

The tyres should be cold for measurement! Warm tyres can distort the measurement result.

1. Briefly press the function button (1) to switch the device on.
   ⇨ The LC display (2) is switched on and shows the last measuring unit used.
   ⇨ The LED torch (3) turns on.
2. Place the measuring tip (6) on the valve of your tyre. The measured tyre pressure is displayed in the measurement value display (10).

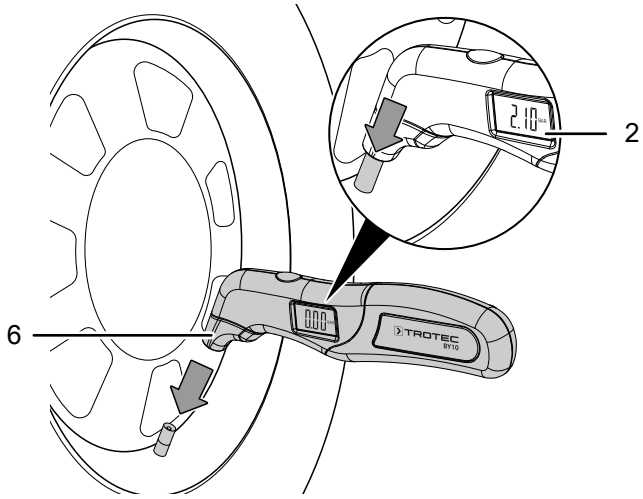

Changing the unit psi / bar / kPa

✓ The device is switched on.

1. Press the function button (1) several times to switch between the units (psi – bar – kPa).
   ⇨ The selected unit is shown in the respective indication (7, 8, 9).

Switch-off

If the device is not used for 45 seconds, it switches off automatically.

If you want to switch off the device directly, press and hold the function button (1) for approx. 3 seconds.

Maintenance and repair

Battery change

It is required to change the batteries if the indications on the display are only faintly visible, if the LED torch is only faintly illuminated or not illuminated at all, or if the unit can no longer be switched on (see chapter Inserting the batteries).

Cleaning

Clean the device with a soft, damp and lint-free cloth. Make sure that no moisture enters the housing. Do not use any sprays, solvents, alcohol-based cleaning agents or abrasive cleaners, but only clean water to moisten the cloth.

Repair

Do not modify the device or install any spare parts. For repairs or device testing, contact the manufacturer.

Disposal

Always dispose of packing materials in an environmentally friendly manner and in accordance with the applicable local disposal regulations.



The icon with the crossed-out wheeled bin indicates that this device and any associated components (e.g. remote controls) must not be disposed of with household waste at the end of their life, in accordance with the Waste Electrical and Electronic Equipment Directive (2012/19/EU) and national laws.

You will find collection points for free return of waste electrical and electronic equipment in your vicinity. The addresses can be obtained from your municipality or local administration. You can also find out about other return options that apply for many EU countries on the website https://hub.trotec.com/?id=45090. Otherwise, please contact an official recycling centre for electronic and electrical equipment authorised for your country.

The separate collection of waste electrical and electronic equipment aims to enable the re-use, recycling and other forms of recovery of waste equipment as well as to prevent negative effects for the environment and human health caused by the disposal of hazardous substances potentially contained in the equipment.



This icon with the crossed-out wheeled bin indicates that batteries or accumulators must not be disposed of with household waste at the end of their life. If the device contains batteries or accumulators that contain mercury, cadmium or lead, the respective chemical symbol (Hg, Cd or Pb) is shown below the icon of the crossed-out wheeled bin. To prevent environmental pollution, do not carelessly leave batteries or electrical and electronic equipment containing batteries in public areas. In the European Union, batteries and accumulators must be returned to a designated collection point in accordance with REGULATION (EU) 2023/1542 OF THE EUROPEAN PARLIAMENT AND OF THE COUNCIL of 12 July 2023 concerning batteries and waste batteries. Remove batteries/accumulators and dispose of them separately according to the relevant legal requirements.

Only for United Kingdom

According to Waste Electrical and Electronic Equipment Regulations 2013 (SI 2013/3113) (as amended) and the Waste Batteries and Accumulators Regulations 2009 (SI 2009/890) (as amended), devices that are no longer usable must be collected separately and disposed of in an environmentally friendly manner.

Trotec GmbH

Grebbener Str. 7
52525 Heinsberg
Germany
+49 2452 962-0
+49 2452 962-200

online@trotec.com
www.trotec.com